The Use of Palm Oil for Electricity Generation in the Amazon Region

Suani Teixeira Coelho, Orlando Cristiano da Silva, Sílvia Maria Stortini González Velázquez, Maria Beatriz Camargo de Almeida Monteiro, Carlos Eduardo Grassi Silotto
Brazilian Reference Center on Biomass – Av. Prof. Luciano Gualberto, 1289, Cidade Universitária, São Paulo, SP, Brazil.
CEP 05508-010. Phone/Fax 55-11-3091 2655.
e-mail: cenbio@iee.usp.br

Abstract

The territorial occupation of the Amazon region is characterized by small villages, which makes the conventional electric distribution impracticable economically and technically due to the long distances between these communities and its small population.
For electricity generation in these remote areas, it's quite normal to use a diesel-fuelled engine coupled to a generator that is connected to a small grid. However, this solution is not satisfactory because the diesel oil transportation to these places is difficult and quite expensive.
To solve the electric problem of these communities, that have the lowest Human Development Index of the country, it is necessary for them to produce their own fuel, generating electric energy and promoting their development.
These are the premises that had guided the elaboration of the PROVEGAM project **- Implantation and test of an unit demonstration of energetic utilization of vegetable oil**, in which the objective is to install and test, in operational conditions of field, the performance of a conventional diesel engine, adapted to operate with palm oil "*in natura"* in the community of Vila Soledade, Moju municipality, Pará.
The implantation of an electric energy generation system using vegetable oil, reduces diesel importations. The palm oil "in natura" is a local resource, renewable and economically viable to use in Amazon isolated communities.
A MWM diesel generator, model TD229EC-6, manufactured in Brazil, adapted with a conversion kit to operate with "*in natura"* palm oil, was installed in the community in June of 2003.
This conversion kit, developed by the Thermal Engine Laboratory – LMT, was designed and constructed in order to use the heat of the engine water-cooling system, to preheat the palm oil. Due to the vegetable oil viscosity, it was necessary to heat the vegetable oil until 85ºC, before its injection in the combustion chamber. The operation begins and finishes with diesel oil, in order to heat the palm oil and to clean possible residues. The use of the palm oil justifies itself for being produced in that specific region, which means that it doesn't have to be imported.
During the installation of the conversion kit, the diesel oil emissions and performance were compared with the palm oil. Currently, the generator group is working in the community during 5 hours per day with palm oil, 1 hour with diesel oil, having more than 2300 hours of testing.
The engine was equipped with some sensors that monitor the temperature of the lube oil, the temperature of the vegetable oil, exhaust temperature, local temperature and admission pressure. Every day, the system local operator, takes some notes of these data, and at the end

of the project, all the modifications in the conversion kit and the performance of the engine will be shown.
After the project implementation, in February 2004, it was realized a socioeconomic survey at the community with the main objective of showing the changes occurred in the population's life conditions. The survey showed a big improvement on life conditions and acquisition of lamps, household-electric and electromechanical equipment, actually existent in more than 80% of the community residences with electric energy. Another benefit brought by the energy availability was the opening of a night school that actually attends all the community, including adults, reducing so, the illiteracy levels.
The installation of a new generation energy model from a clean and renewable mechanism creates a construction perspective of a correct environmental model that guarantees an economically viable system generation that can be a reference for other initiatives.
The project´s results, so far, have confirmed the conceived premises, and this electric model of generating energy is already recommended to be implemented in other communities in the Amazon region, contributing to the energy access universalization.

Key-words: decentralized energy, vegetable oil, isolated communities

1. Introduction

The Brazilian Amazon region has the lowest electrification rate of the country due to the conventional supply model installed in Brazil that is based on big hydro power plants and distribution nets. This model is not appropriated for remote and isolated areas due to the distances and dispersed occupation.

For electricity generation in remote and isolated areas, it is quite normal to use a diesel-fuelled engine coupled to a generator that is connected to a small grid. However, this solution was not satisfactory because the diesel oil transport to these places is very expensive. The difficulty of supplying these communities with electric energy, does not allow that economic activities get organized, so the communities can raise their own development.

The conditions of isolation and dispersion of these communities that live in the Amazon Region, imposed specific solutions for the electric generation, and this is the base that created the PROVEGAM project, considering the oil production vocation of the region.

The use of vegetable oil "in natura" in conventional diesel generators, demands a specific technological step, and the implantation of this unit of tests, is going to be presented in this paper.

2. PROVEGAM Project.

The PROVEGAM Project - **Implantation and test of an unit demonstration of energetic utilization of vegetal oil**, financed by FINEP - Projects and Studies Financial and coordinate by the Brazilian Reference Center on Biomass – CENBIO, has as objective to install and test in operational conditions of field, a conventional diesel engine, adapted to operate with palm oil "*in natura*" in the community of Vila Soledade, city of Moju, Pará. Vila Soledade is an isolated community that has, approximately, 700 inhabitants, 120 houses and it's located at one hundred kilometers from downtown by car and 30 minutes more by boat.
Vila Soledade is an organized community in the region with schools, churches, telephones, food stores and it had, before the PROVEGAM project, an old diesel generator that was not able to supply the whole community with electric energy.

The PROVEGAM project, implanted in the community in 2003, installed a new diesel generator, adapted with a conversion kit to operate with "*in natura"* palm oil, working 6 hours per day.

Figure 1 – Vila Soledade
Source: CENBIO, 2003

2.1 Technical data

The system é composed by a Generator WEG, a MWM diesel engine, model TD 229-E6, manufactured in Brazil, 6 cylinders, turbo charged, and it was adapted with a conversion kit which makes possible the combustion of the palm oil. This kit heats the palm oil until 85ºC in order to a completed fuel atomization in the combustion chamber for the combustion.

Palm oil has two different phases, the estearine and the oleine. The estearine is much thicker than the oleine, that is the reason why it was necessary to heat the palm oil until 85ºC, before it reaches the injector pump. The Thermal Engine Laboratory – LMT developed the conversion device (kit) to preheat the palm oil using the heat of the engine´s cooling water system. The engine turbo charge supplied the effect, similar to increasing the compression ratio.

The operation begins and finishes with diesel oil, in order to heat the palm oil and to clean some vegetable oil residue that can clog some parts of the system, like the fuel filter.

This conversion kit developed by the LMT was designed and constructed in order to use the heat of the engine water-cooling system to preheat the palm oil in a service tank to 60ºC and after heated, to heat it to 85ºC. This kit provided some improvements to the system. The lube oil showed less contamination. It was submitted to some analysis and now it can be changed every 200 hours. After the installation of this kit, it was noticed that the injector's nozzle can stay in proper use for 800 hours.

The engine was equipped with some sensors that monitors the temperature of the lube oil, the temperature of the vegetable oil, exhaust temperature, and every day, the system local operator takes some notes of these data and at the end of the project, all the modifications in the conversion kit and in the engine will be shown.

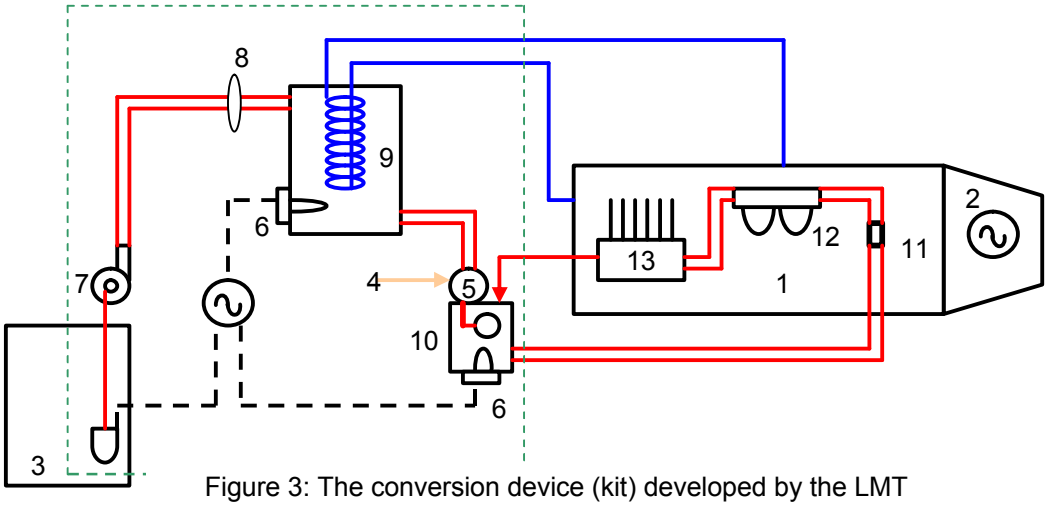

Figure 3: The conversion device (kit) developed by the LMT

1- Diesel Engine.
2- Generator.
3- Palm Oil Service tank.
4- Connection to the diesel oil system.
5- 3 way valve.
6- Pre-heater.
7- Transference pump.
7- Palm oil filter.
8- Heating tank.
9- Electric heater.
10- Manual Pump.
11- Engine fuel filter.
12- Injection pump.

3. Results

Data about emissions, performance of the engine and supply energy quality were checked during the project.

The first time that the engine was analyzed, elements of the injector pump were changed and the injectors showed some deposits that were formed during 600 hours of operation, now, with the conversion kit developed by the LMT, these injectors can be changed in 800 hours. To improve this performance, it would be necessary a better filtration of the palm oil.

Table 1 – Stack gas data

Day	Hour (pm)	Fuel	CO	CO_2	O_2	HC	NOx	ml/min
19	06:00	Diesel	0,04	5,1	13,8	10	585	230
19	06:30	Palm	0,04	5,3	13,6	11	570	246
20	05:30	Diesel	0,02	4,9	14,0	13	669	227
20	06:30	Palm	0,02	5,1	13,8	15	637	244

Source: LMT, 2003

After 800 hours of tests, the engine was disassembled to scrape carbon deposits from the combustion chamber and cylinder heads. Carbon deposits were caused by the high viscosity and fuel density plugging the injectors, causing poor injection, fuel atomization and

vaporization. Analyzing the engine and its components, it was noticed that the injectors had some carbon residues, and they were changed after 800 hours of use.

Deposit or carbon deposit may be defined as heterogeneous mixture made up of carbon residue (ash), carbonaceous mixtures (soot) and an oxygenated resinous organic material that bind together as mixtures (SHURVELL, CLAGE and SOUTHBY, 1997).

The emission proceeding from vegetable oil stack gas, analyzed by COPPE/UFRJ during two days, showed that the emission proceeding from diesel oil and palm oil stack gas was equivalent. The emissions variation between diesel and palm oil can be observed on table 01. A very important aspect from emissions results is the sulfur oxide absence on diesel oil combustion stack gas.

In the PROVEGAM project, the fuel filters of the engine had to be changed in a very short period due to the quality of the palm oil and its viscosity.

Figure 4 – Fuel Injectors

Figure 5 – Fuel filters of the engine

The proposals of energy supply must include, as possible, the local communities at the energy production process and it must be instruments for the regional development, associating environmental, economic and social advantages to the fuel production for electricity generation.

In February 2004, it was realized a socioeconomic survey at the community with the main objective of showing the changes occurred in the population's life conditions. The survey showed a big improvement on life conditions for the majority of families and acquisition of lamps, household-electric and electromechanical equipment actually existent in more than 80% of the residences with electric energyat the community. It's evidenced in figures 06 and 07.

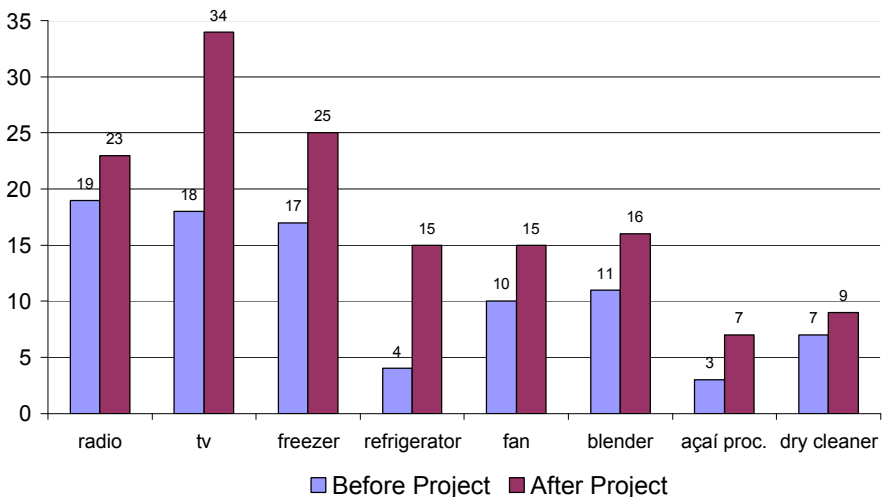

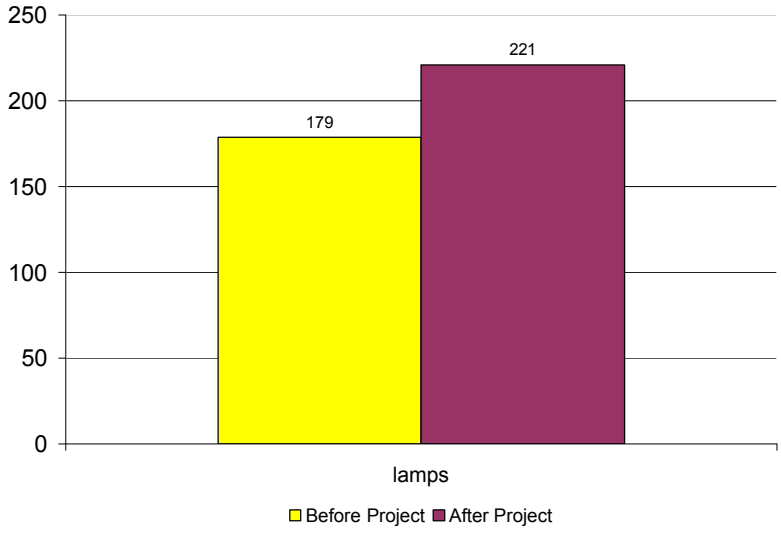

The continuous energy availability made possible to the inhabitants to invest in açaí processors and others work instruments to benefit the selling of regional products. In a socioeconomic survey were found seven açaí processor machines and four of them were bought after the project implantation.

Moreover, the inhabitants bought freezers and refrigerators that increased from 17 to 25 and from 4 to 15 respectively, used to conserve the local products like fruits juice, fishes and cupuaçu. Another benefit brought by the energy availability was the opening of a night school that actually attends all the community, including adults, reducing so, the illiteracy levels.

Among the environmental advantages, it was observed that the implantation of electric energy generation system using vegetable oil reduced diesel importations, very expensive to the community due the transportation difficulty. The palm oil "in natura" is a local resource, renewable and economically viable to be used in Amazon isolated communities.

The electric energy supply, without the loss of monetary resources for the acquisition of diesel oil to the engine, combined to the familiar agriculture stimulates the community small trade of local products adding value to them. With energy availability it's possible to benefit local products like palm oil, açaí, manioc and cupuaçu. Once increasing force to these raw materials, the profitability and advantages get higher, fixing the inhabitants at the community and providing life conditions availability.

Added to that, it was created an electric generation model that can reactivate any deactivated diesel generator or introduce new ones at isolated communities using locally made vegetable oils.

The installation of a new generation energy model from a clean and renewable mechanism creates a construction perspective of a correct environmental model that guarantees an economically viable system generation that can be a reference for other initiatives.

The tests and the diary accompanying of the engine show that the system used performs in normally conditions, beyond the improvements that can be expected.

For the supplied energy quality, the majority of inhabitants interviewed in the socioeconomic survey showed themselves pleased with the good results from the project and admitted big changes after the new generator group implantation, as much for energy hours availability, as much for the energy quality, since there is not supply interruptions. Added to that, it was

possible to verify, by visiting the community that the electric distribution system operates in perfect conditions and supply good quality energy for all the residences.

4. Conclusions

The PROVEGAM project was conceived with the main objective to create and test a decentralized new model of electric energy generation from "*in natura*" vegetable oil.

This model will be indicated to isolated communities that have conditions to cultivate oleaginous species in familiar agriculture system, to extract vegetable oil to fill up a conventional diesel generator. The PROVEGAM project´s contemplated was the community of Vila Soledade that has the cultivation and palm oil supply availability. The tests totalized more than 2500 hours, showed the technical viability of "*in natura*" palm oil combustion in diesel cycle engines. The high operation and maintenance costs of palm oil (filters, injectors and scrape carbon residues) in comparison with diesel oil, it is compensated due the availability of the biofuel.

The project results have confirmed the conceived premises and the system implanted is already recommended to be replied in others Amazon region communities, contributing to the energy access universalization.

References

CENBIO – Centro Nacional de Referência em Biomassa. Projeto PROVEGAM, Relatório de viagem, 2003.

H.F. Shurvell, A.D.H. Clague and M.C. Southby, (1997). Method for determination of the composition of diesel engine piston deposits by infrared spectroscopy. *Journal of Applied Spectroscopy* 51 6, pp. 827– 835.

LMT – Laboratório de Máquinas Térmicas da Universidade Federal do Rio de Janeiro – 4° Relatório do projeto PROVEGAM, Rio de Janeiro, 2000.